progeCAD 2009 Smart! - Personal use only - Business Use is Illegal

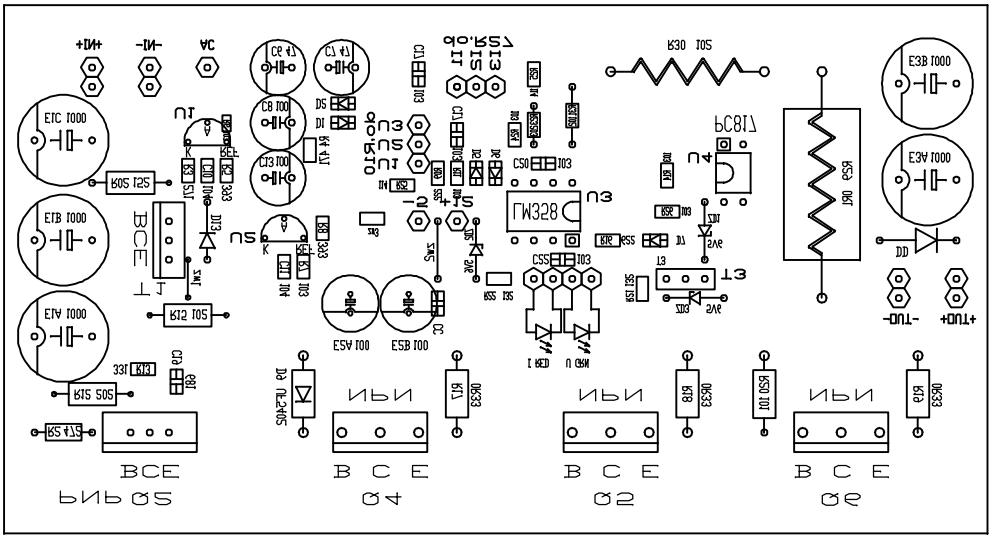

progeCAD 2009 Smart! - Personal use only - Business Use is Illegal